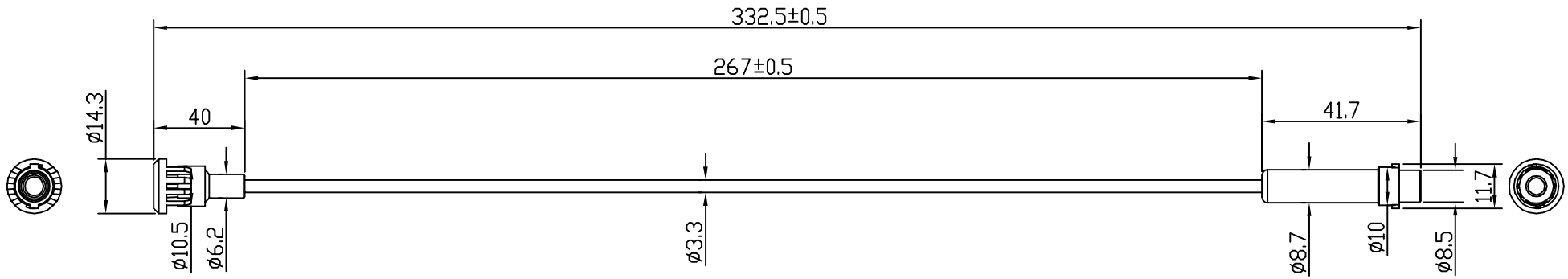

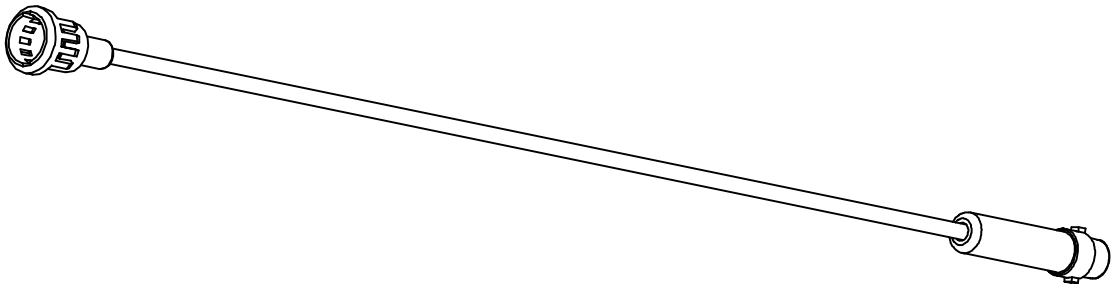

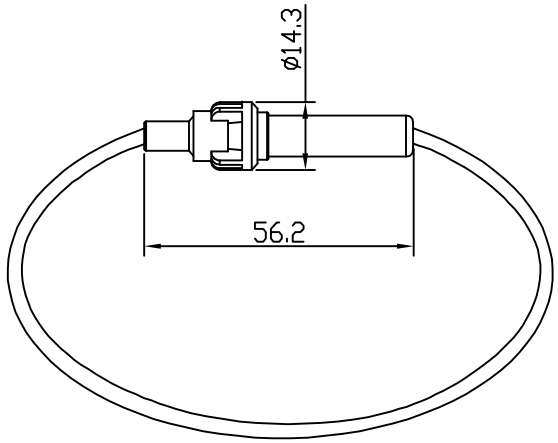

OTHER TOLERANCE:± 0.1

SMB®				DESCRIPTION	PINISHED PRODUCTS	SCALE	FIT	UNITS: MM	3RD ANGLE
				MODEL NO,	FR2636B-WH				
APPROVED	CHECKED	DRAWING	DESIGNED	DRAWING NO,					
				FINISHING		▲			
				MATERIAL		SYM	DATE		REVISION

QR-025 2003.03.20 A1